Cambridge International AS & A Level

Cambridge International Examinations
Cambridge International Advanced Subsidiary and Advanced Level

CANDIDATE NAME	
CENTRE NUMBER	
CANDIDATE NUMBER	

0123456789

PHYSICS **9702/04**

Paper 4 A Level Structured Questions **For Examination from 2016**

SPECIMEN PAPER

2 hours

Candidates answer on the Question Paper.

No Additional Materials are required.

READ THESE INSTRUCTIONS FIRST

Write your Centre number, candidate number and name on all the work you hand in.
Write in dark blue or black pen.
You may use an HB pencil for any diagrams or graphs.
Do not use staples, paper clips, glue or correction fluid.
DO **NOT** WRITE IN ANY BARCODES.

Answer **all** questions.

Electronic calculators may be used.
You may lose marks if you do not show your working or if you do not use appropriate units.

At the end of the examination, fasten all your work securely together.
The number of marks is given in brackets [ ] at the end of each question or part question.

This document consists of **24** printed pages.

© UCLES 2014

CAMBRIDGE International Examinations

Data

speed of light in free space	$c = 3.00 \times 10^{8}\ \text{m s}^{-1}$
permeability of free space	$\mu_0 = 4\pi \times 10^{-7}\ \text{H m}^{-1}$
permittivity of free space	$\varepsilon_0 = 8.85 \times 10^{-12}\ \text{F m}^{-1}$
	$(\frac{1}{4\pi\varepsilon_0} = 8.99 \times 10^{9}\ \text{m F}^{-1})$
elementary charge	$e = 1.60 \times 10^{-19}\ \text{C}$
the Planck constant	$h = 6.63 \times 10^{-34}\ \text{J s}$
unified atomic mass unit	$1\ \text{u} = 1.66 \times 10^{-27}\ \text{kg}$
rest mass of electron	$m_e = 9.11 \times 10^{-31}\ \text{kg}$
rest mass of proton	$m_p = 1.67 \times 10^{-27}\ \text{kg}$
molar gas constant	$R = 8.31\ \text{J K}^{-1}\ \text{mol}^{-1}$
the Avogadro constant	$N_A = 6.02 \times 10^{23}\ \text{mol}^{-1}$
the Boltzmann constant	$k = 1.38 \times 10^{-23}\ \text{J K}^{-1}$
gravitational constant	$G = 6.67 \times 10^{-11}\ \text{N m}^2\ \text{kg}^{-2}$
acceleration of free fall	$g = 9.81\ \text{m s}^{-2}$

© UCLES 2014

Formulae

uniformly accelerated motion	$s = ut + \frac{1}{2}at^2$ $v^2 = u^2 + 2as$
work done on/by a gas	$W = p\Delta V$
gravitational potential	$\phi = -\frac{Gm}{r}$
hydrostatic pressure	$p = \rho gh$
pressure of an ideal gas	$p = \frac{1}{3}\frac{Nm}{V}\langle c^2 \rangle$
simple harmonic motion	$a = -\omega^2 x$
velocity of particle in s.h.m.	$v = v_0 \cos \omega t$ $v = \pm \omega \sqrt{(x_0^2 - x^2)}$
Doppler effect	$f_o = \frac{f_s v}{v \pm v_s}$
electric potential	$V = \frac{Q}{4\pi\varepsilon_0 r}$
capacitors in series	$1/C = 1/C_1 + 1/C_2 + \ldots$
capacitors in parallel	$C = C_1 + C_2 + \ldots$
energy of charged capacitor	$W = \frac{1}{2}QV$
electric current	$I = Anvq$
resistors in series	$R = R_1 + R_2 + \ldots$
resistors in parallel	$1/R = 1/R_1 + 1/R_2 + \ldots$
Hall voltage	$V_H = \frac{BI}{ntq}$
alternating current/voltage	$x = x_0 \sin \omega t$
radioactive decay	$x = x_0 \exp(-\lambda t)$
decay constant	$\lambda = \frac{0.693}{t_{\frac{1}{2}}}$

© UCLES 2014

[Turn over

Answer **all** the questions in the spaces provided.

1 **(a)** The Earth may be considered to be a uniform sphere of radius 6380 km with its mass of 5.98×10^{24} kg concentrated at its centre, as illustrated in Fig. 1.1.

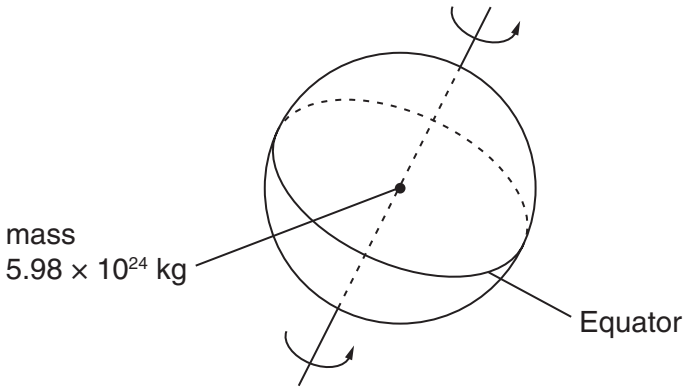

Fig. 1.1

A mass of 1.00 kg on the Equator rotates about the axis of the Earth with a period of 8.62×10^4 s.

Calculate, to three significant figures,

(i) the gravitational force F_G of attraction between the mass and the Earth,

F_G = ... N [2]

(ii) the centripetal force F_C on the 1.00 kg mass,

F_C = ... N [3]

© UCLES 2014

(iii) the difference in magnitude of the forces.

difference = ... N [1]

(b) By reference to your answers in **(a)**, suggest, with a reason, a value for the acceleration of free fall at the Equator.

.....

.....

..... [1]

[Total: 7]

2 The volume of some air, assumed to be an ideal gas, in the cylinder of a car engine is 540 cm^3 at a pressure of 1.1×10^5 Pa and a temperature of 27 °C. The air is suddenly compressed to a volume of 30 cm^3. No energy enters or leaves the gas by heating during the compression.
The pressure rises to 6.5×10^6 Pa.

(a) Determine the temperature of the gas after the compression.

temperature = ... K [2]

(b) (i) State the first law of thermodynamics.

.....

.....

.....

..... [2]

(ii) Use the law to explain why the temperature of the air changed during the compression.

.....

.....

.....

.....

..... [3]

[Total: 7]

© UCLES 2014

3 **(a)** The defining equation for simple harmonic motion is

$$a = -\omega^2 x.$$

(i) State the relation between ω and the frequency f.

..... [1]

(ii) State the significance of the negative ($-$) sign in the equation.

..... [1]

(b) A frictionless trolley of mass m is held on a horizontal surface by means of two similar springs, each of spring constant k. The springs are attached to fixed points, as illustrated in Fig. 3.1.

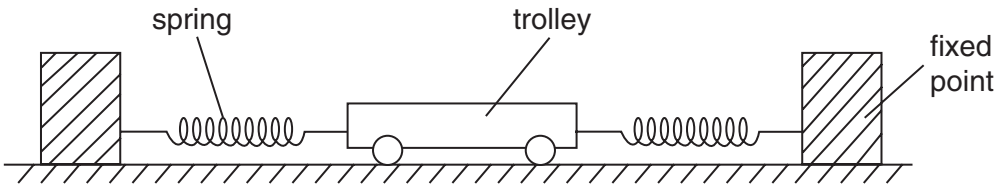

Fig. 3.1

When the trolley is in equilibrium, the extension of each spring is e.

The trolley is then displaced a small distance x to the right along the axis of the springs. Both springs remain extended.

(i) Show that the magnitude F of the restoring force acting on the trolley is given by

$$F = 2kx.$$

[2]

(ii) The trolley is then released. Show that the acceleration a of the trolley is given by

$$a = -\frac{2kx}{m}.$$

[2]

(iii) The mass m of the trolley is 900 g and the spring constant k is 120 N m^{-1}. By comparing the equations in **(a)** and **(b)(ii)**, determine the frequency of oscillation of the trolley.

frequency = ... Hz [3]

[Total: 9]

© UCLES 2014

4 A sinusoidal wave of frequency 75 kHz is to be amplitude modulated by a wave of frequency 5.0 kHz.

(a) Explain what is meant by *amplitude modulation*.

.....

.....

..... [2]

(b) On the axes of Fig. 4.1, sketch a graph to show the variation with frequency *f* of the power *P* of the modulated wave. Label values on the frequency axis.



Fig. 4.1

[3]

(c) State the bandwidth of the modulated wave.

bandwidth = ... kHz [1]

[Total: 6]

5 A microphone is connected directly to an amplifer having a gain of 63 dB, as shown in Fig. 5.1.

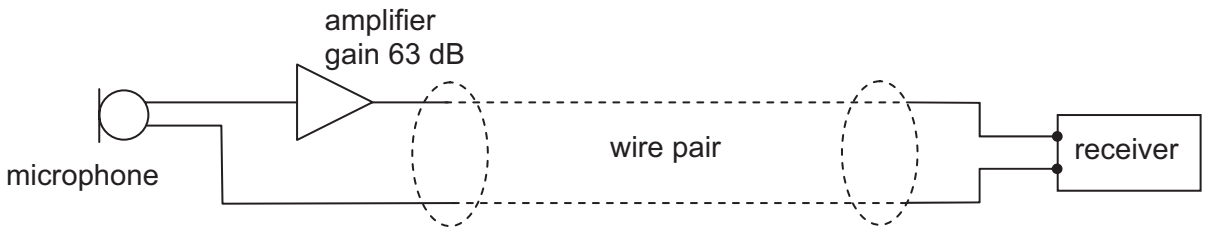

Fig. 5.1

The microphone and amplifier are connected to a receiver by means of a wire pair having an attenuation of 12 dB per kilometre length. The power of the output signal from the microphone is 2.5 μW and there is a constant noise power in the wire pair of 0.035 μW.

(a) Explain what is meant by *noise*.

.....

..... [1]

(b) Calculate the power output of the amplifier.

power output = ... W [3]

(c) Calculate the length of the wire pair for the signal power to be reduced to the level of the noise power.

length = ... km [2]

[Total: 6]

© UCLES 2014

6 **(a)** State the relation between electric field strength E and potential V.

.....

..... [2]

(b) Two positively charged metal spheres A and B, of diameters 18 cm and 12 cm respectively, are isolated in space, as shown in Fig. 6.1.

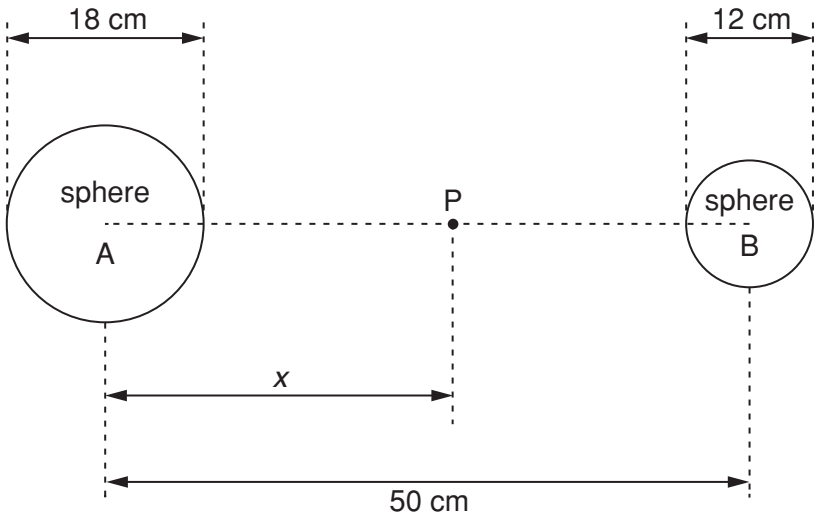

Fig. 6.1

The centres of the spheres are separated by a distance of 50 cm. Point P is at a distance x from the centre of sphere A along the line joining the centres of the two spheres.

The variation with x of the electric potential V at P is shown in Fig. 6.2.

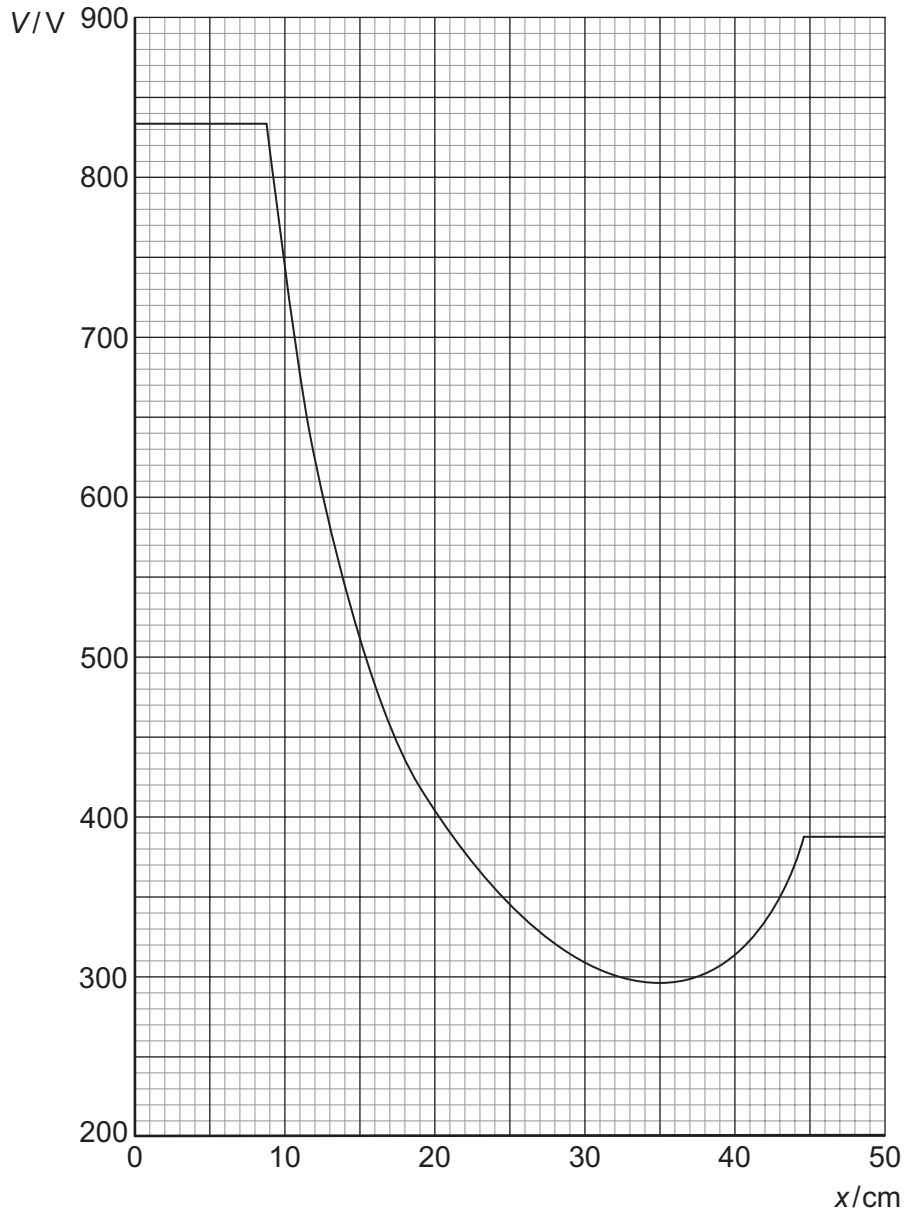

Fig. 6.2

State, qualitatively, and explain the variation with distance of the force on a proton placed at point P where x varies from $x = 10\,\text{cm}$ to $x = 41\,\text{cm}$.

.....

.....

.....

.....

.....

.....

.....

..... [6]

[Total: 8]

7 **(a)** The symbol for a light-emitting diode (LED) is shown in Fig. 7.1.

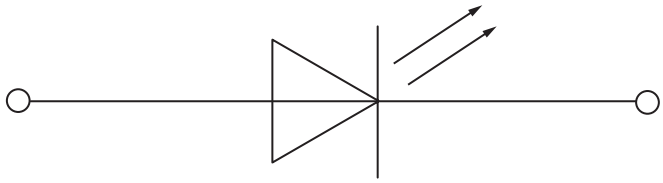

Fig. 7.1

On Fig. 7.1, mark the polarity of the diode such that the diode is emitting light. [1]

(b) The circuit diagram for a temperature-sensing device is shown in Fig. 7.2.

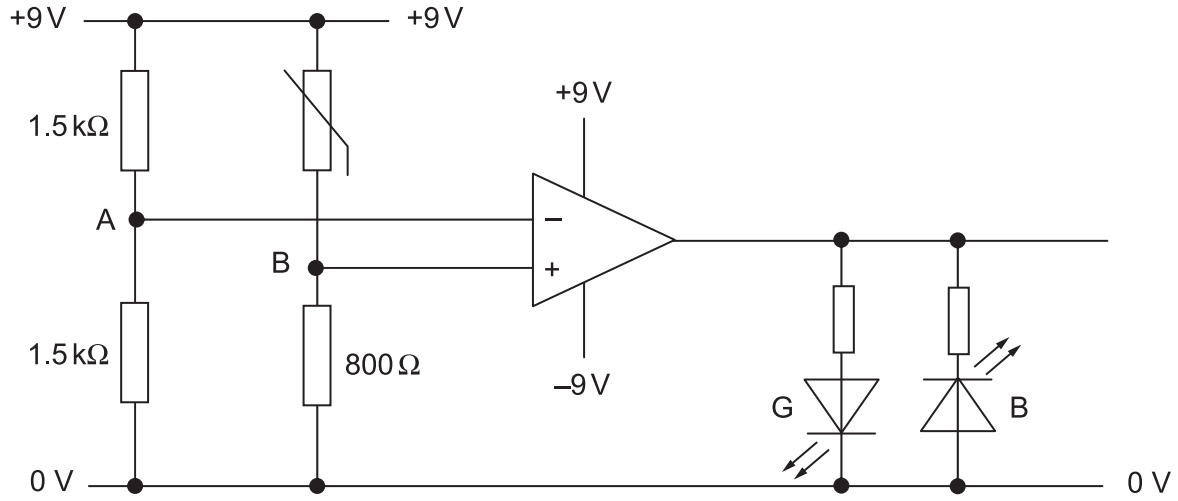

Fig. 7.2

The operational amplifier (op-amp) is ideal.

Some values for the resistance of the thermistor at different temperatures are given in Fig. 7.3.

temperature / °C	resistance / Ω
15	2200
30	1200
60	800
100	680

Fig. 7.3

The thermistor is held in a water bath at a temperature of 15 °C.

© UCLES 2014

(i) Determine the voltage

1. at A,

voltage = ... V

2. at B,

voltage = ... V

3. at the output of the operational amplifier.

voltage = ... V
[4]

(ii) State which LED is emitting light.

..... [1]

(c) Describe and explain what is observed as the temperature of the thermistor is raised from 15 °C to 100 °C.

.....

.....

..... [2]

[Total: 8]

8 A small coil is positioned so that its axis lies along the axis of a large bar magnet, as shown in Fig. 8.1.

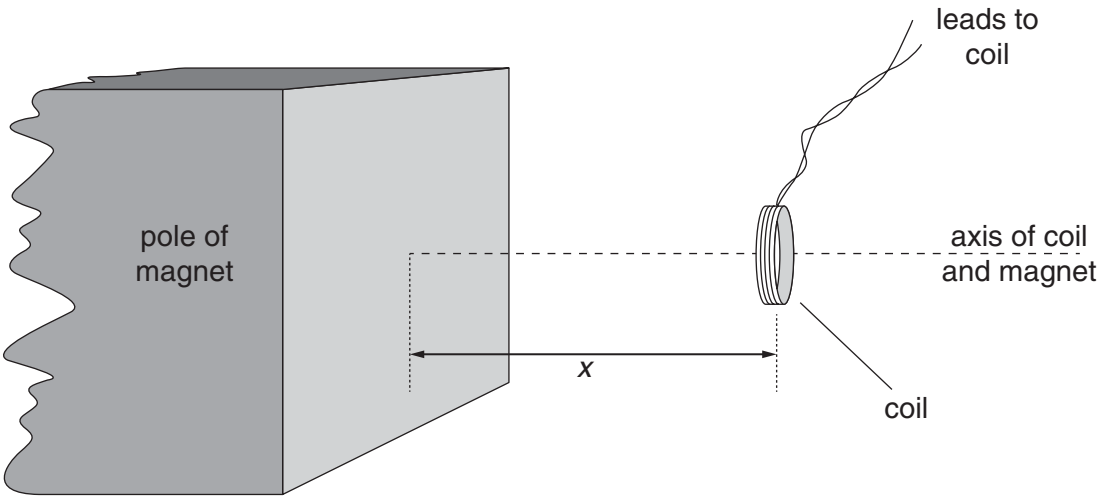

Fig. 8.1

The coil has a cross-sectional area of 0.40 cm^2 and contains 150 turns of wire.

The average magnetic flux density *B* through the coil varies with the distance *x* between the face of the magnet and the plane of the coil, as shown in Fig. 8.2.

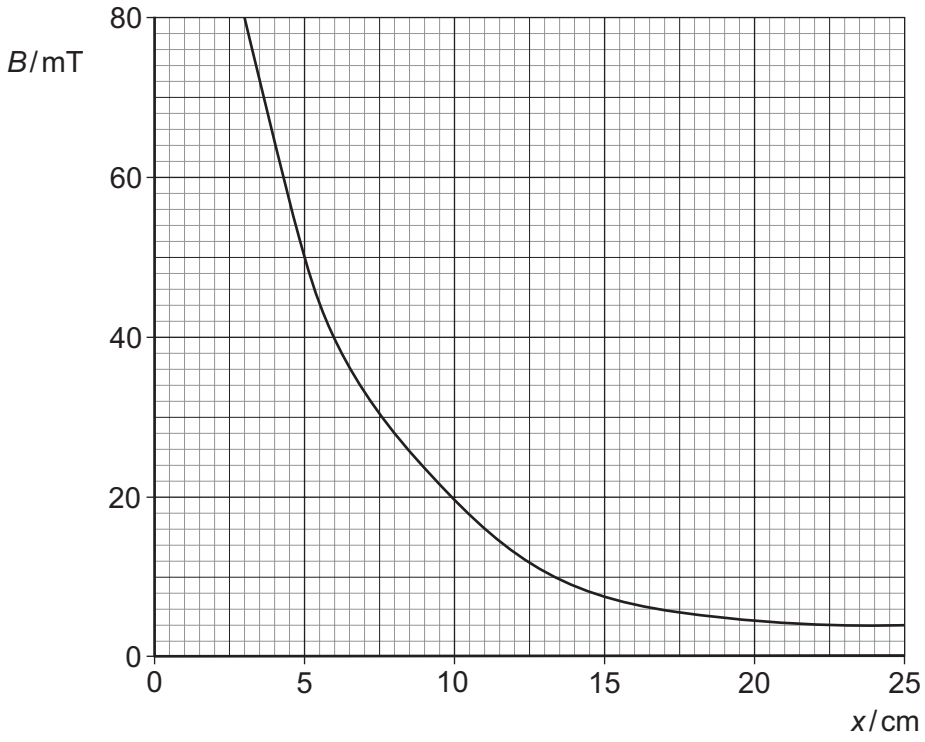

Fig. 8.2

(a) **(i)** The coil is 5.0 cm from the face of the magnet. Use Fig. 8.2 to determine the magnetic flux density in the coil.

magnetic flux density = ... T [1]

(ii) Hence show that the magnetic flux linkage of the coil is 3.0×10^{-4} Wb.

[2]

(b) State Faraday's law of electromagnetic induction.

.....

.....

..... [2]

(c) The coil is moved along the axis of the magnet so that the distance x changes from $x = 5.0$ cm to $x = 15.0$ cm in a time of 0.30 s. Calculate

(i) the change in flux linkage of the coil,

change = ... Wb [2]

(ii) the average e.m.f. induced in the coil.

e.m.f. = ... V [2]

© UCLES 2014

(d) State and explain the variation, if any, of the speed of the coil so that the induced e.m.f. remains constant during the movement in **(c)**.

.....

.....

.....

..... [2]

[Total: 11]

© UCLES 2014

9 A charged particle passes through a region of uniform magnetic field of flux density 0.74 T, as shown in Fig. 9.1.

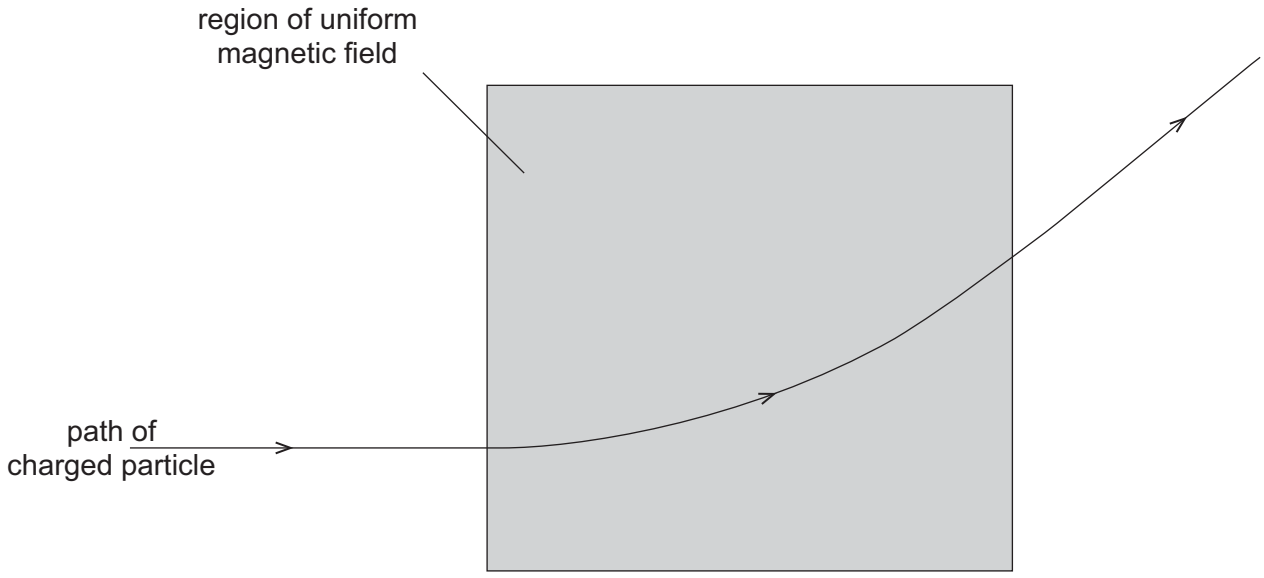

Fig. 9.1

The radius r of the path of the particle in the magnetic field is 23 cm.

(a) The particle is positively charged. State the direction of the magnetic field.

..... [1]

(b) **(i)** Show that the specific charge of the particle (the ratio $\frac{q}{m}$ of its charge to its mass) is given by the expression

$$\frac{q}{m} = \frac{v}{rB}$$

where v is the speed of the particle and B is the magnetic flux density of the field.

[2]

(ii) The speed v of the particle is $8.2 \times 10^6\,\text{m s}^{-1}$. Calculate the specific charge of the particle.

specific charge = ... C kg^{-1} [2]

[Total: 5]

© UCLES 2014

10 The rectified output of a sinusoidal signal generator is connected across a resistor R of resistance 1.5 kΩ, as shown in Fig. 10.1.

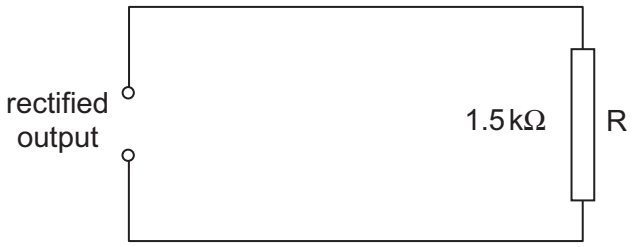

Fig. 10.1

The variation with time *t* of the potential difference *V* across R is shown in Fig. 10.2.

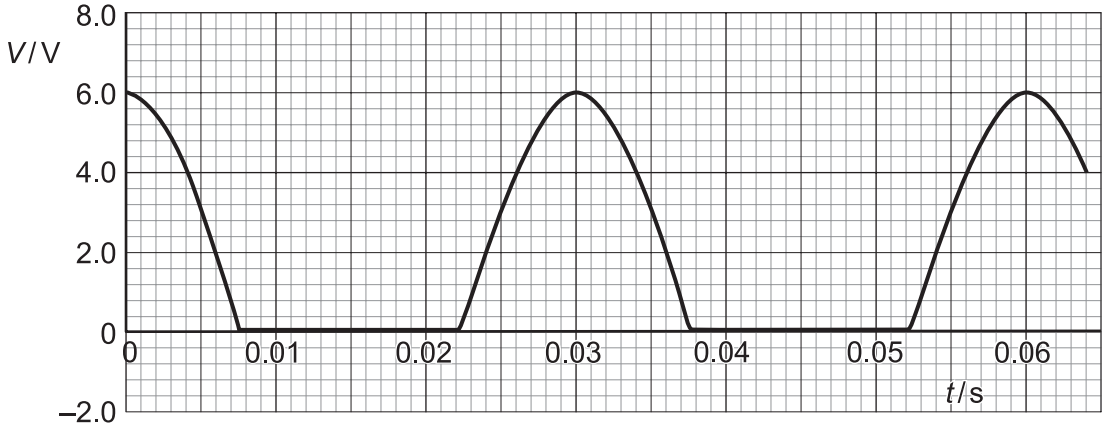

Fig. 10.2

(a) State how the rectification shown in Fig. 10.2 may be achieved.

.....

..... [2]

(b) A capacitor is now connected in parallel with the resistor R. The resulting variation with time *t* of the potential difference *V* across R is shown in Fig. 10.3.

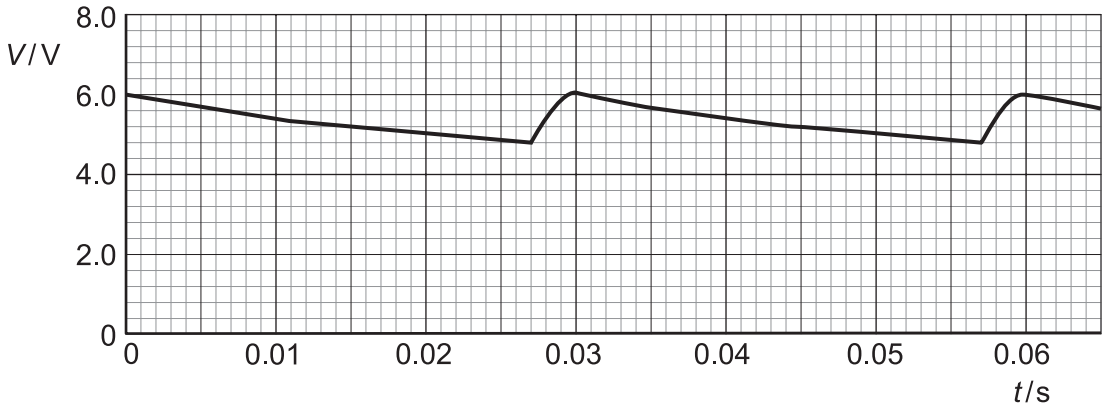

Fig. 10.3

© UCLES 2014

(i) Using Fig. 10.3, determine

1. the mean potential difference across the resistor R,

potential difference = ... V

2. the mean current in the resistor R,

mean current = ... A

3. the time in each cycle during which the capacitor discharges through the resistor.

time = ... s
[3]

(ii) Using your answers in **(i)**, calculate

1. the charge passing through the resistor during one discharge of the capacitor,

charge = ... C

2. the capacitance of the capacitor.

capacitance = ... F
[4]

(c) A second capacitor is now connected in parallel with the resistor R and the first capacitor. On Fig. 10.3, draw a line to show the variation with time *t* of the potential difference *V* across the resistor. [1]

[Total: 10]

11 The energy bands in a solid are illustrated in Fig. 11.1.



Fig. 11.1

By considering charge carriers and lattice vibrations, use band theory to explain the change of resistance of an intrinsic semiconductor with change of temperature.

.....

.....

.....

.....

.....

.....

.....

.....

..... [6]

[Total: 6]

© UCLES 2014

12 **(a)** The quality of an image produced using X-rays depends on sharpness and contrast. State what is meant by

(i) *sharpness*,

.....

..... [1]

(ii) *contrast*.

.....

..... [1]

(b) A parallel beam of X-ray photons is produced by an X-ray tube with 80 kV between anode and cathode. The beam has its intensity reduced to one half of its original value when it passes through a thickness of 1.0 mm of copper.

(i) Determine the linear absorption (attenuation) coefficient μ of the X-ray photons in the copper.

$\mu =$ ..... mm^{-1} [2]

(ii) Suggest, with a reason, the effect on the linear absorption coefficient if the beam is comprised of 100 keV photons.

.....

.....

..... [2]

[Total: 6]

© UCLES 2014

[Turn over

13 The isotopes radium-224 ($^{224}_{88}$Ra) and radium-226 ($^{226}_{88}$Ra) both undergo spontaneous α-particle decay. The energy of the α-particles emitted from radium-224 is 5.68 MeV and from radium-226, 4.78 MeV.

(a) (i) State what is meant by the *decay constant* of a radioactive nucleus.

.....

.....

..... [2]

(ii) Suggest, with a reason, which of the two isotopes has the larger decay constant.

.....

.....

.....

..... [3]

(b) Radium-224 has a half-life of 3.6 days.

(i) Calculate the decay constant of radium-224, stating the unit in which it is measured.

decay constant = ... [2]

(ii) Determine the activity of a sample of radium-224 of mass 2.24 mg.

activity = ... Bq [4]

[Total: 11]

Permission to reproduce items where third-party owned material protected by copyright is included has been sought and cleared where possible. Every reasonable effort has been made by the publisher (UCLES) to trace copyright holders, but if any items requiring clearance have unwittingly been included, the publisher will be pleased to make amends at the earliest possible opportunity.

Cambridge International Examinations is part of the Cambridge Assessment Group. Cambridge Assessment is the brand name of University of Cambridge Local Examinations Syndicate (UCLES), which is itself a department of the University of Cambridge.

© UCLES 2014